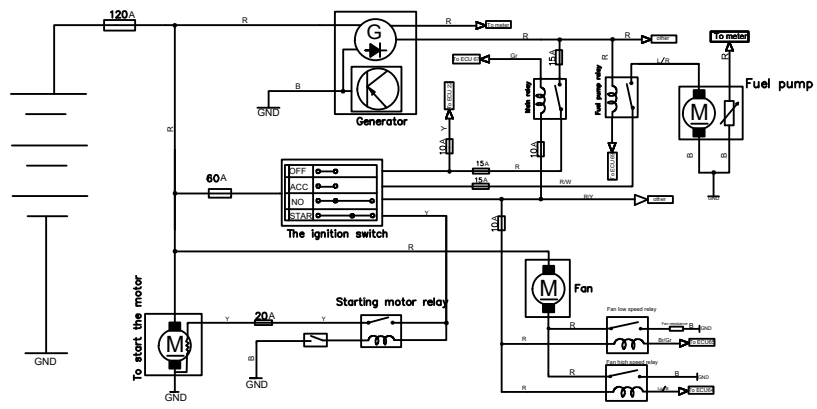
120A
Generator
GND
60A
OFF
ACC
NO
START
The ignition switch
To meter
Fuel pump
Idle relay
Fuel pump relay
Fan
Starting motor relay
20A
To start the motor
Fan low speed relay
Fan high speed relay

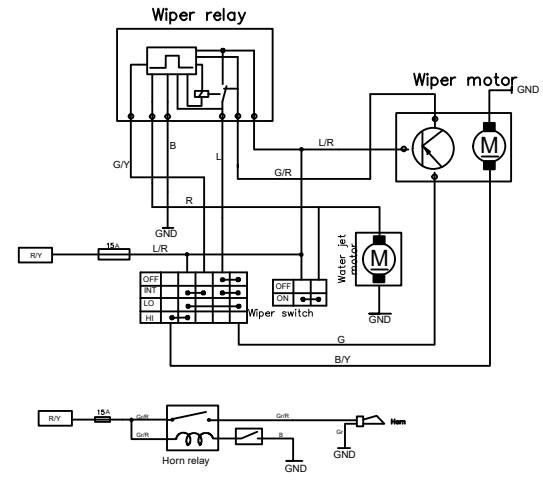
Wiper relay
Wiper motor
GND
L/R
G/Y
G/R
R/Y
15A
OFF
INT
LO
HI
Wiper switch
OFF
ON
Water jet motor
G
B/Y
Horn relay
Horn

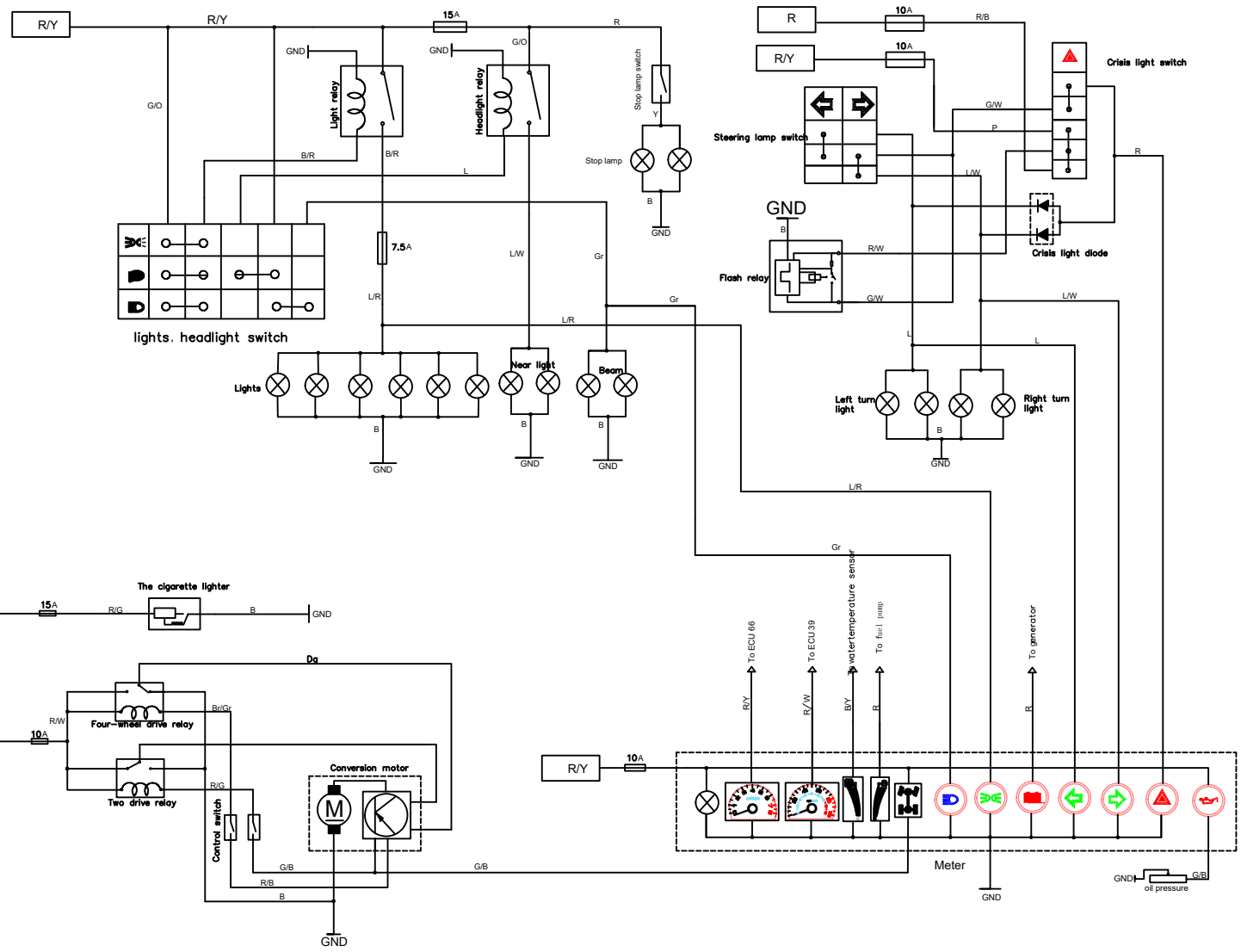
R/Y
15A
Light relay
Headlight relay
Stop lamp switch
Stop lamp
lights, headlight switch
7.5A
Lights
Near light
Beam
10A
Steering lamp switch
Crisis light switch
Crisis light diode
Flash relay
Left turn light
Right turn light
The cigarette lighter
Four-wheel drive relay
Two drive relay
Control switch
Conversion motor
Meter
oil pressure
To ECU 66
To ECU 39
To watertemperature sensor
To fuel pump
To generator

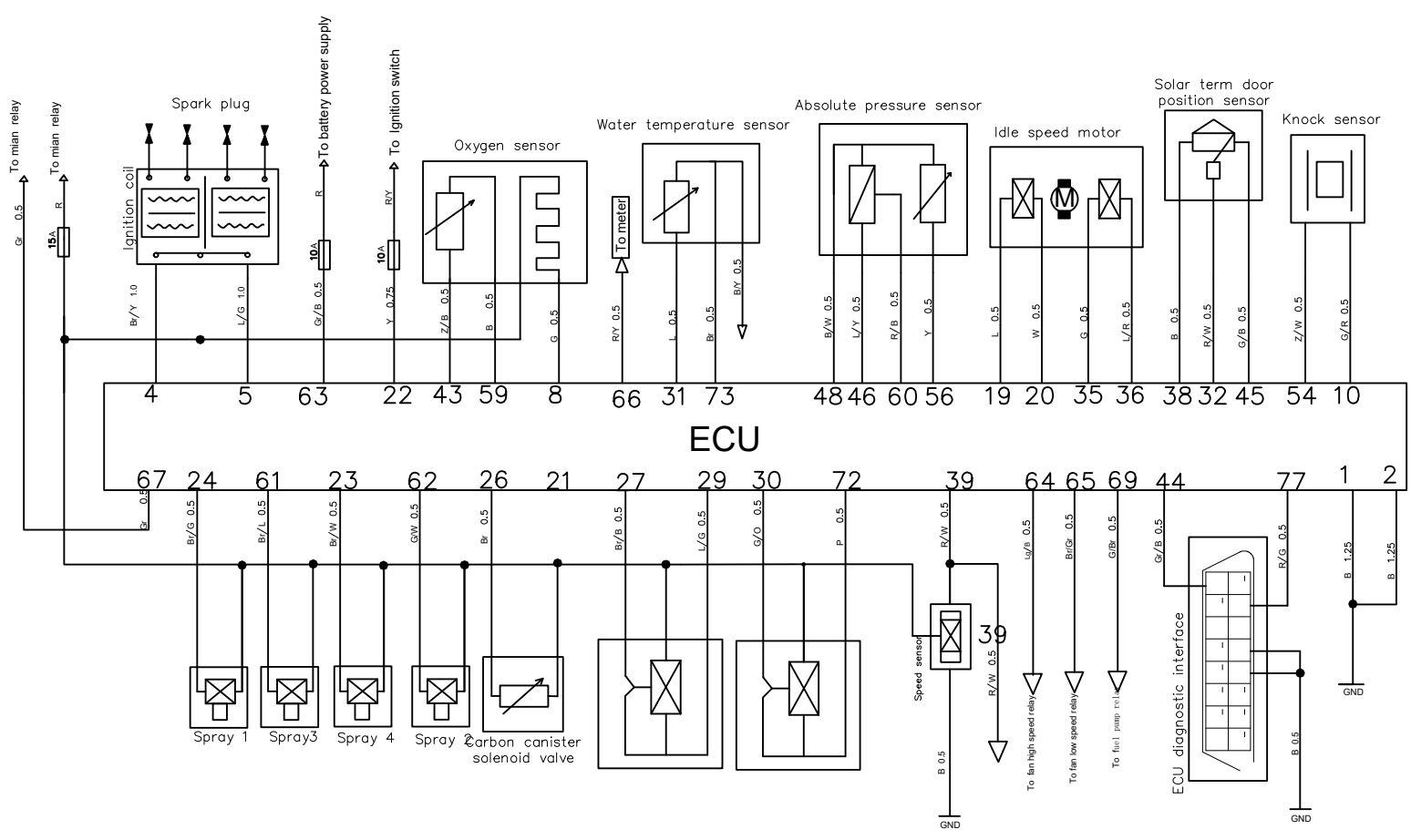
To mian relay
Spark plug
Ignition coil
To battery power supply
To Ignition switch
Oxygen sensor
Water temperature sensor
To meter
Absolute pressure sensor
Idle speed motor
Solar term door position sensor
Knock sensor
ECU
Spray 1
Spray3
Spray 4
Spray 2
Carbon canister solenoid valve
Speed sensor
To fan high speed relay
To fan low speed relay
To fuel pump relay
ECU diagnostic interface
GND